DWG NO	SHEET
2513400	1

© COPYRIGHT 2013 TEXAS INSTRUMENTS
UNPUBLISHED, ALL RIGHTS RESERVED

REVISIONS

REV	DESCRIPTION	DATE	BY
A	ECO #2136196 - INITIAL RELEASE	9/20/13	RDR

NOTES: UNLESS OTHERWISE SPECIFIED:

1. MATERIAL: .35MM THICK 301 STAINLESS STEEL, 1/2 HARD
2. **PART IS MODELED AT 1.27MM (0.50") THICK--IGNORE SOLID MODEL DIMENSIONS**
3. FINISH: BLACK OXIDE

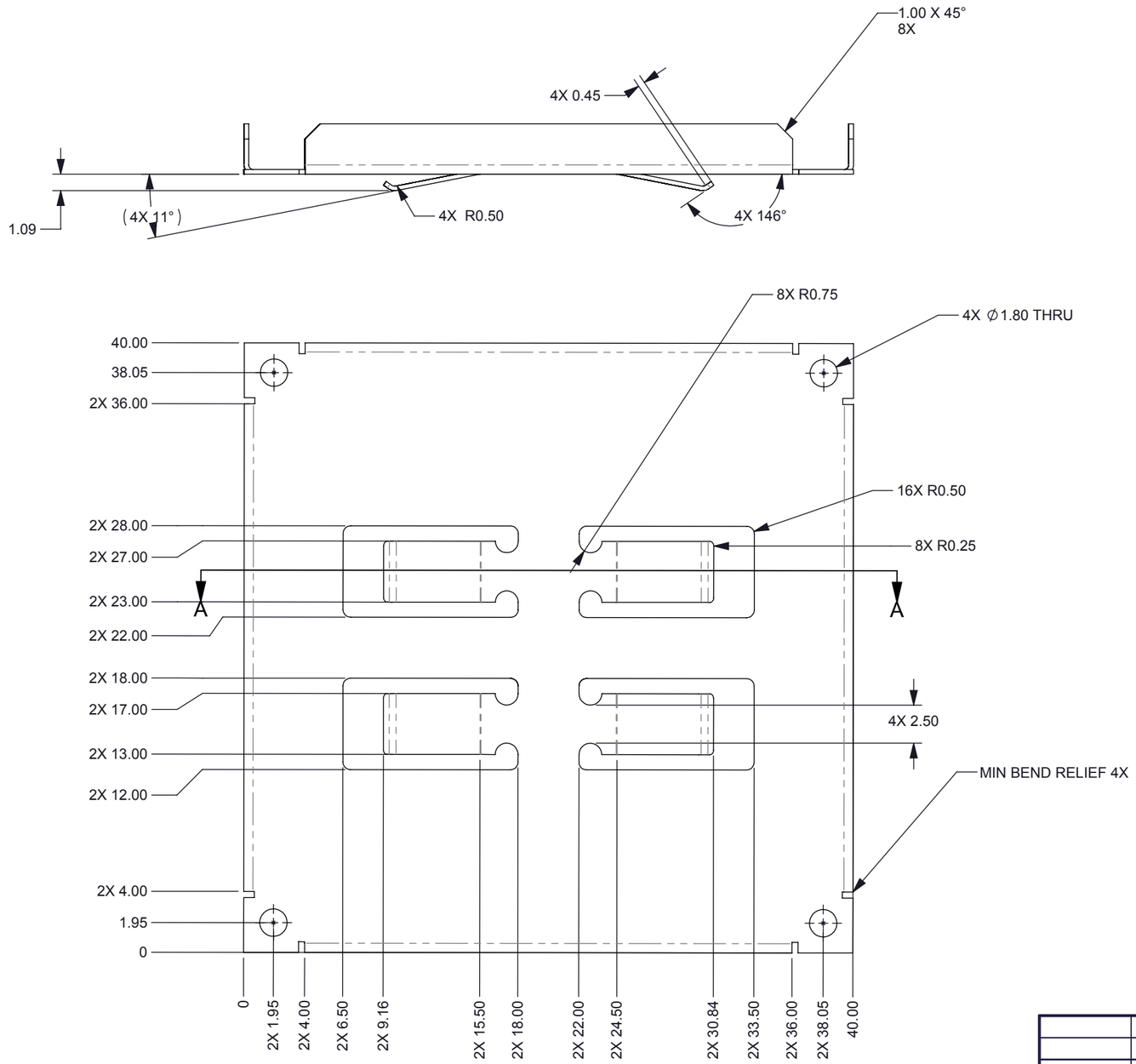

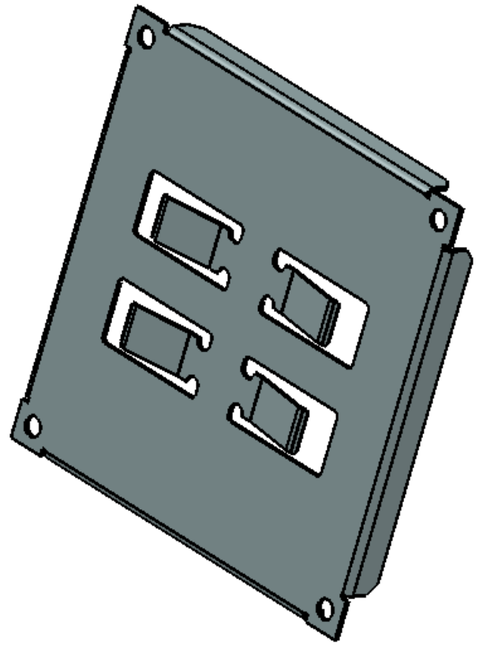

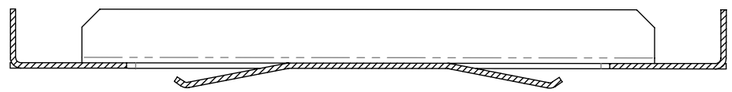

SECTION A-A

THIRD ANGLE PROJECTION

NEXT ASSY	USED ON
APPLICATION	

UNLESS OTHERWISE SPECIFIED
- DIMENSIONS ARE IN MILLIMETERS
- TOLERANCES: ANGLES ±1°
  2 PLACE DECIMALS ±0.25
  1 PLACE DECIMALS ±0.50
- DIMENSIONAL LIMITS APPLY BEFORE PROCESSES
- INTERPRET DIMENSIONS IN ACCORDANCE WITH ASME Y14.5M-1994
- REMOVE ALL BURRS AND SHARP EDGES
- PARENTHETICAL INFO FOR REF ONLY

DWN	DATE
R ROWE	9/9/2013
Engr	
CQE/QA	
CM	
Apprvd	

TEXAS INSTRUMENTS

GRATING RETAINING SPRING

SIZE	DWG NO	REV
B	2513400	A

SCALE 3:1 SHEET 1 OF 1

SW-2010a